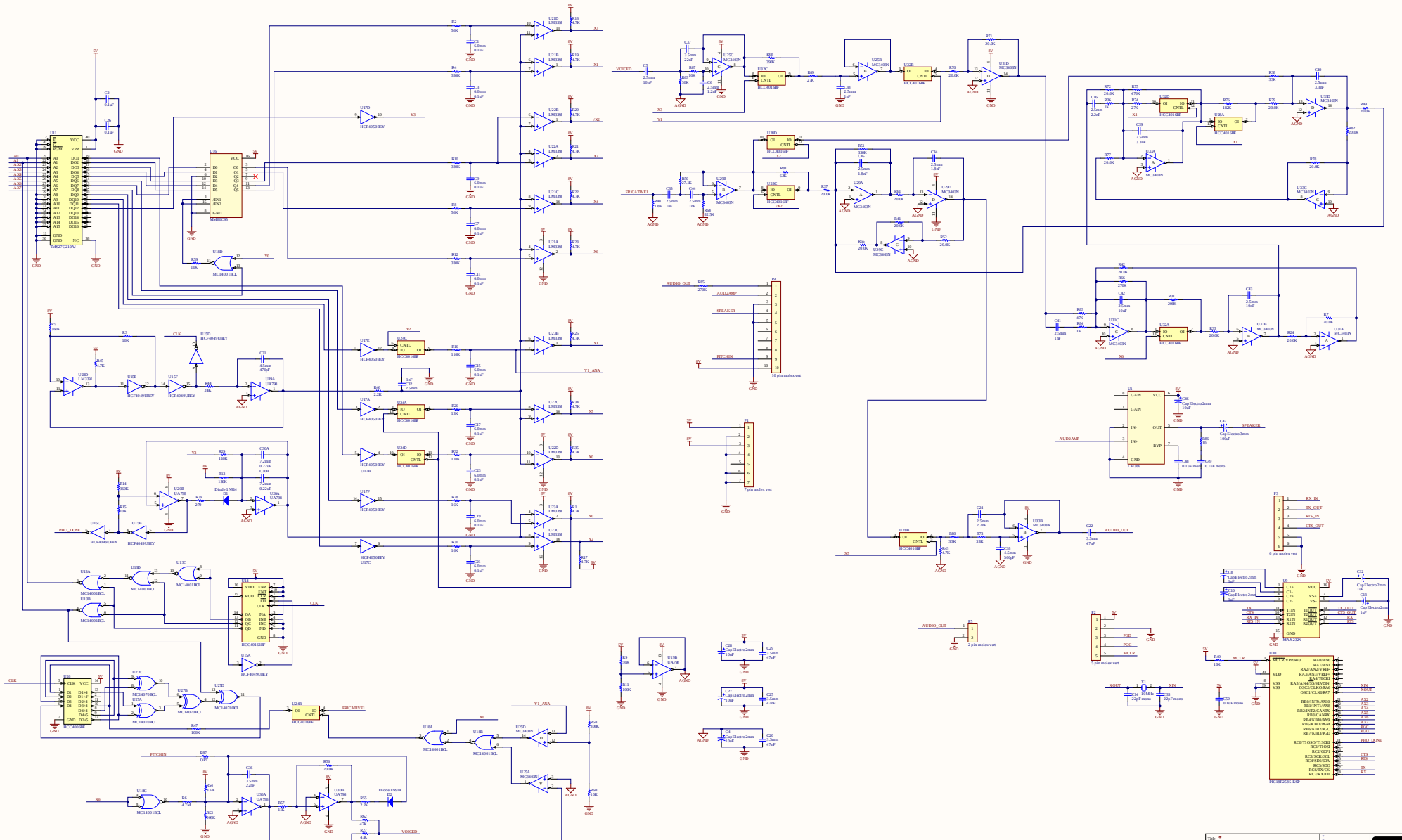
Title: *
Size: D
Number: *
Revision: *
Date: 9/23/2004
Time: 17:31:01
Sheet * of *
File: C:\altium files\projects\v_o_synth\v_o_synth.SchDoc
Altium