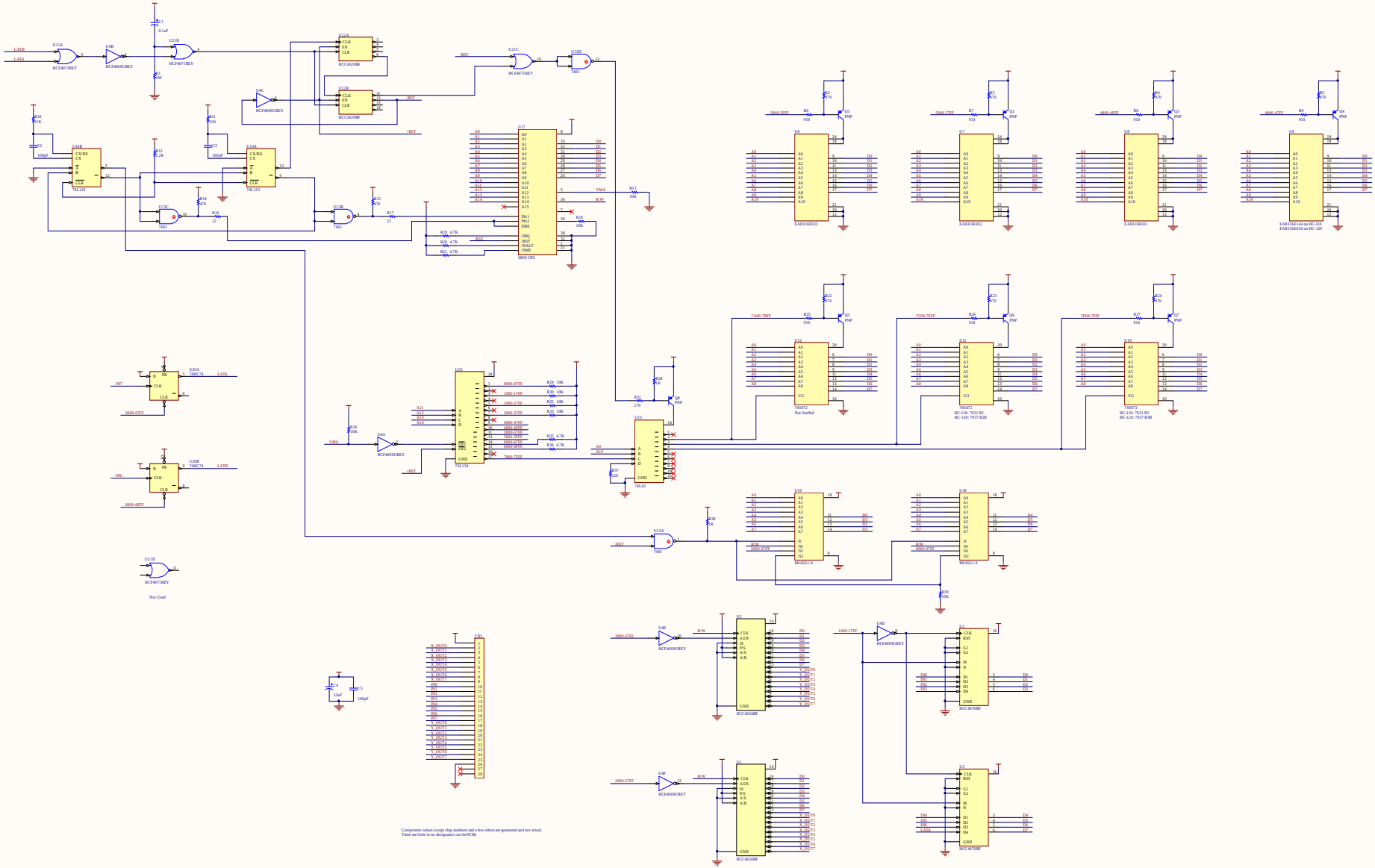

Title	CPU Card for HC-110/120
Size: D	Number: * Revision: *
Date: 9/2/2020	Time: 12:46:31 AM Sheet * of *
File: D:\altium files\projects\HC-110\CPU Board\CpuBrd.SchDoc	

Altium

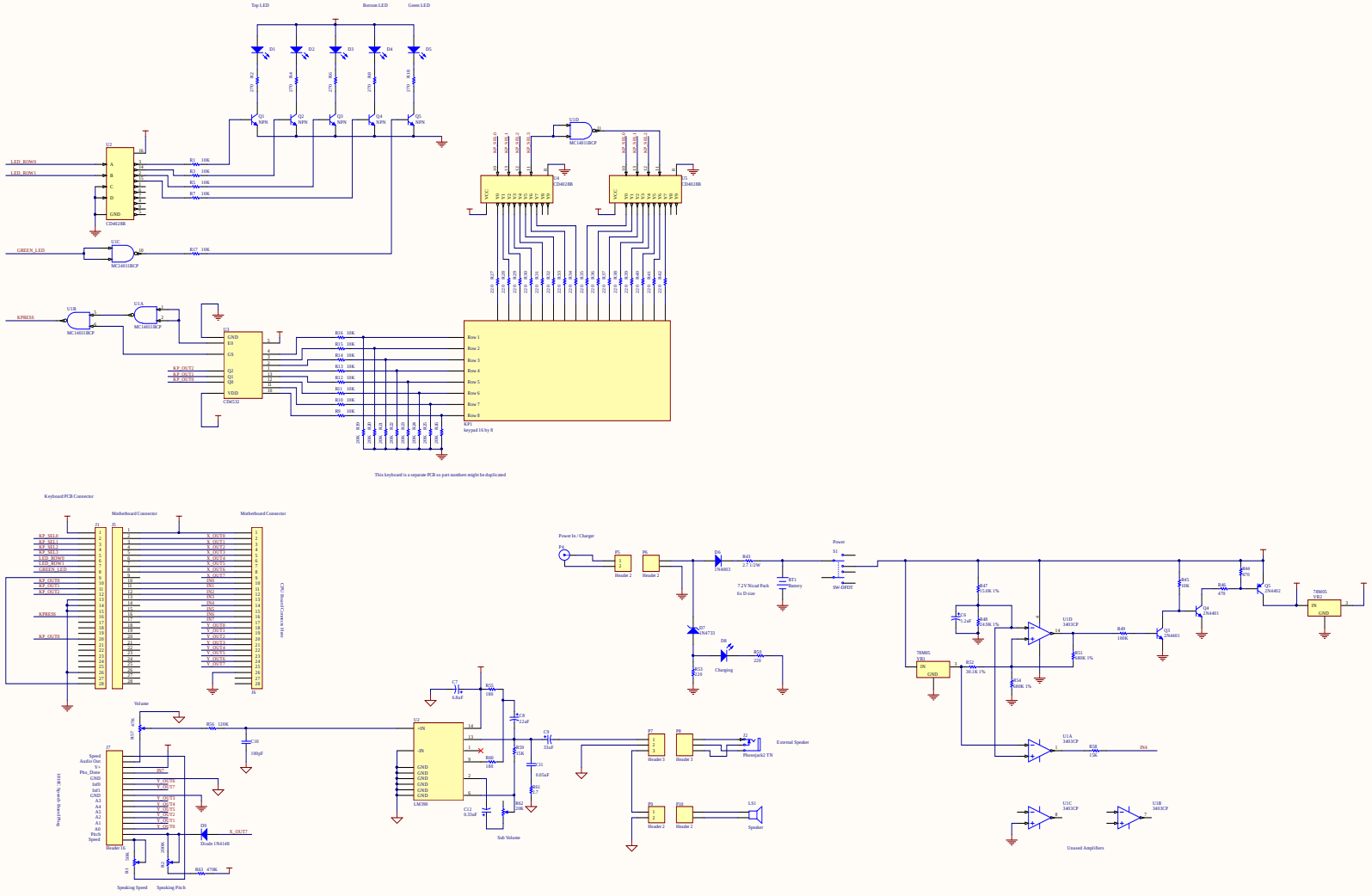

Title: *HC-110 Motherboard and Button PCB*			
Size: D	Number: *	Revision: *	
Date: 8/2/2020	Time: 12:46:31 AM	Sheet * of *	
File: D:\altium files\projects\HC-110\HC-110.SchDoc			

Altium

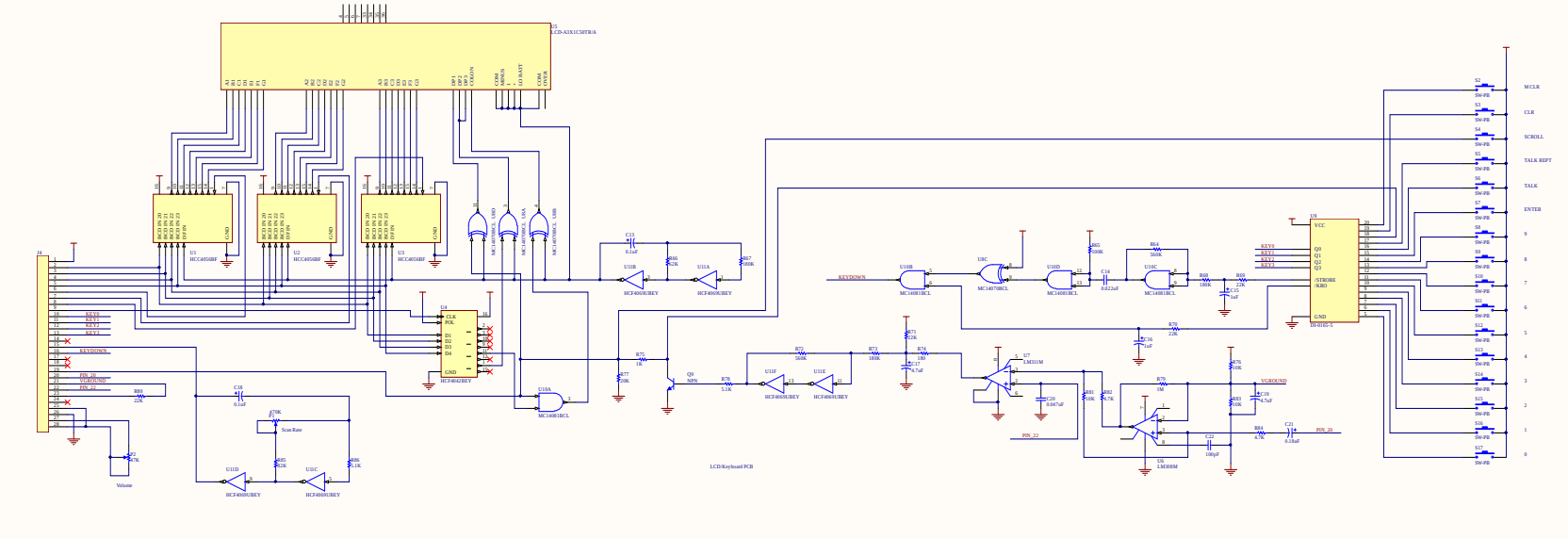

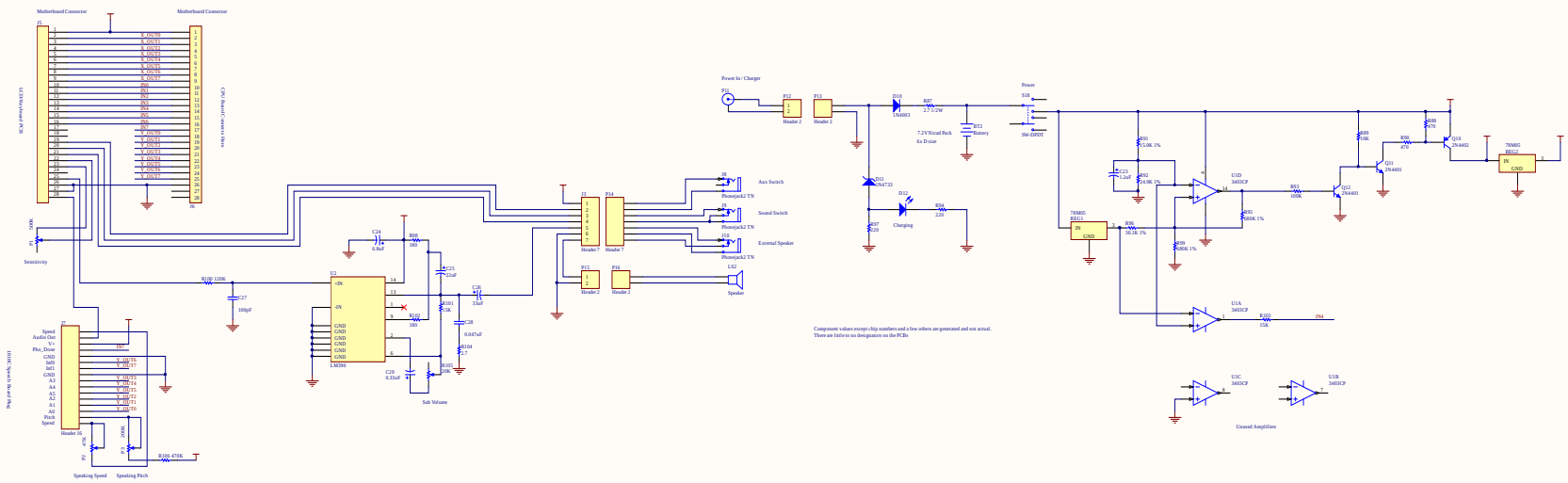

Title: *HC-120 Motherboard/User IO*			
Size: D	Number: *	Revision: *	
Date: 8/2/2020	Time: 12:46:32 AM	Sheet * of *	
File: D:\altium files\projects\HC-120\HC-120.SchDoc			

Altium